CRISTINA

Spare Parts List

CRIIT21772 | Italy Series | Polished Black Chrome | Matching metal knob

How to request a replacement

Provide B&M with the complete SKU CRIIT21772, purchase details and photographs of the installed product and required component. Match the exact model and production revision before ordering.

Manufacturer reference	Selection
CRIAR21240Q00	Manufacturer reference
CRICF15723Q00	Manufacturer reference
CRICR19751Q00	Manufacturer reference
CRICV20803P	Finish or material dependent
CRIMV14897D50	Manufacturer reference
CRIMV20582P00	Manufacturer reference
CRIMV20583F	Finish or material dependent
CRIMV20583N	Finish or material dependent
CRIMV20801F	Finish or material dependent
CRIMV20801N	Finish or material dependent
CRIRI071S	Finish or material dependent
CRIUD425S	Finish or material dependent

Finish and revision notes

Finish/material-dependent families require the correct suffix. Select 72 Polished Black Chrome and the correct control material only where the original sheet lists that option. Do not order another finish column or historical revision. Confirm the complete replacement reference before ordering.

*CRIUD425S...

*CRIRI071S...

*CRIMV20583...

Original manufacturer exploded view follows; its callouts, historical notes and finish qualifications are retained.

ITALY

SCHEDA RICAMBI | SPARE PARTS

CRIIT217 | CRIIT917

SCHEDA RICAMBI | SPARE PARTS SHEET rev.01_02/2025

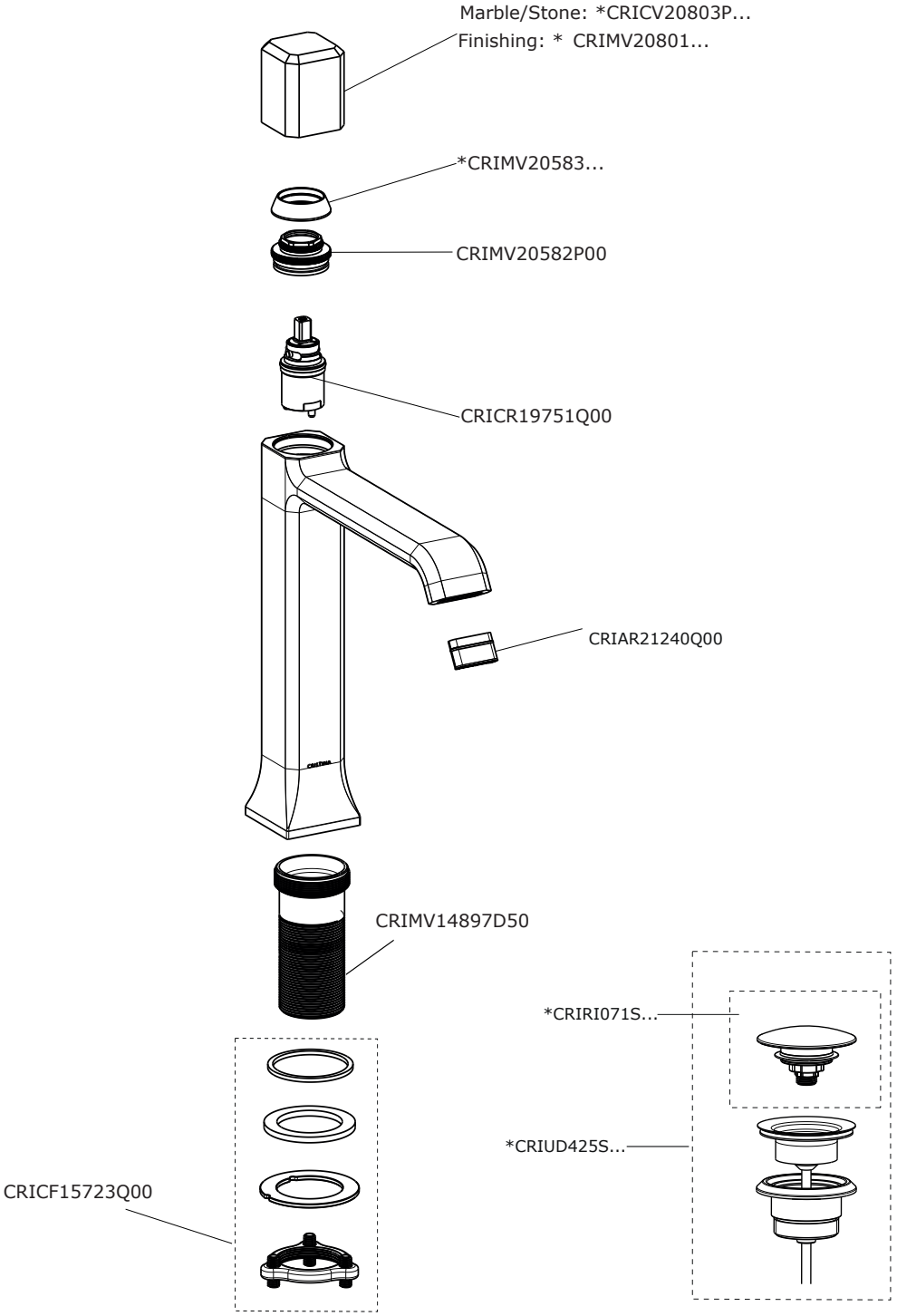

NOTE | NOTES

* completare con codice finitura | complete with finishing code

CRISTINA S.r.l. a socio unico
via G. Fava, 56 - 28024 Gozzano (NO) Italy - phone +39 0322 9545
fax +39 0322 956556 - info@cristinagroup.com
cristinarubinetterie.com

CRISTINA
RUBINETTERIE